**EN WO8906-B | WO8906-W**
GU10 spotlights Eira

Thank you for purchasing our product. Before installing, using or repairing the product, please read this manual carefully and pay attention to the safety warnings and instructions. This will ensure not only personal safety but also the long-term durability of the product. Supplied without a light source.

## INSTALLATION

1. Switch off the power supply.
2. Insert the wall plugs into the pre-drilled holes.
3. Feed the power cable through the top bracket (base) and connect it to the terminal block. Ensure the wiring is correct.
4. Screw the top bracket (base) into place.
5. Screw the body of the unit to the top bracket.
6. Screw the GU10 bulb into the socket and tighten it. Place the bottom cover over the bulb.
7. Screw the bottom cover onto the body of the device.
8. Switch on the power supply.

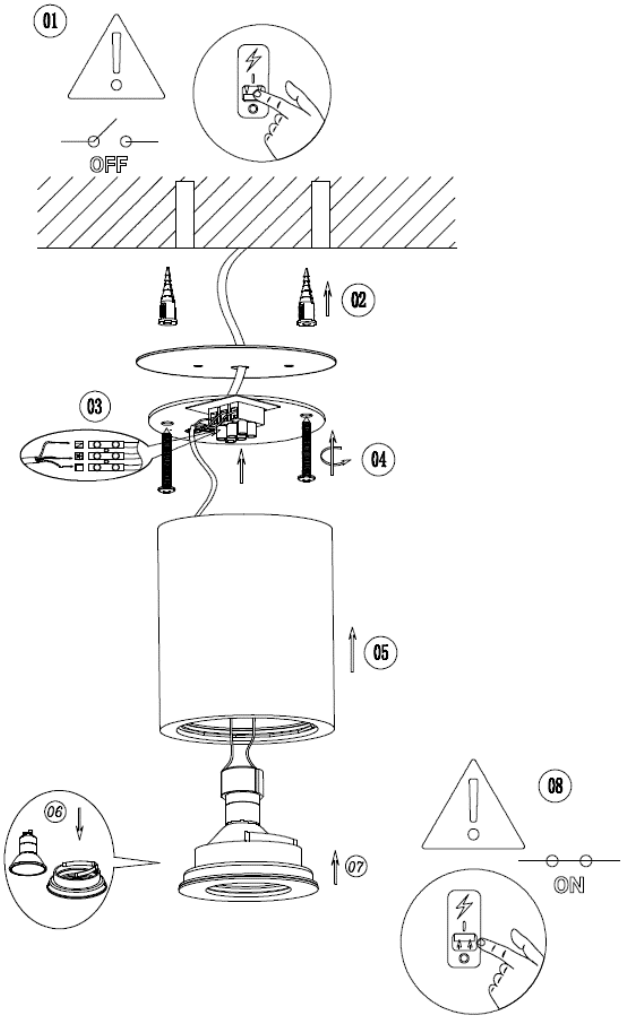


## WARNING

- Installation must only be carried out by a qualified electrician.
- Power supply: 220-240V AC 50/60 Hz.
- For indoor use only.
- Do not dismantle or repair the device.
- There are no replaceable parts in the device.

At the end of the device's service life, it must be disposed of at a designated collection point.

A CE Declaration of Conformity has been issued for the product in accordance with applicable regulations. Available on request from the manufacturer: info@solight.cz, or downloadable from www.solight.cz/en.

Solight Holding, s.r.o., Na Brně 1972, Hradec Králové 500 06, Czech Republic.